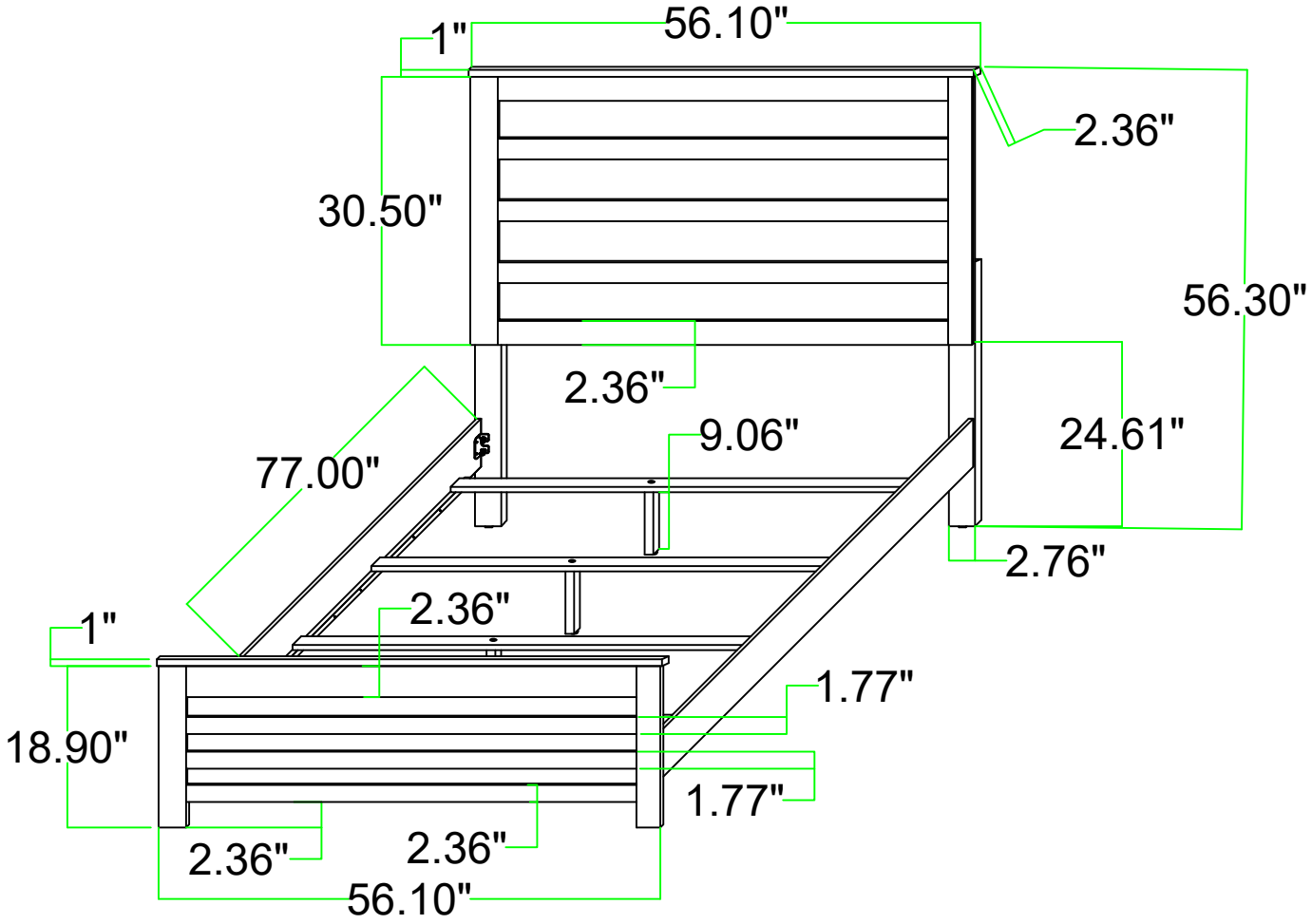
1"
56.10"
2.36"
30.50"
56.30"
2.36"
9.06"
24.61"
77.00"
2.76"
2.36"
1"
1.77"
18.90"
1.77"
2.36"
2.36"
56.10"

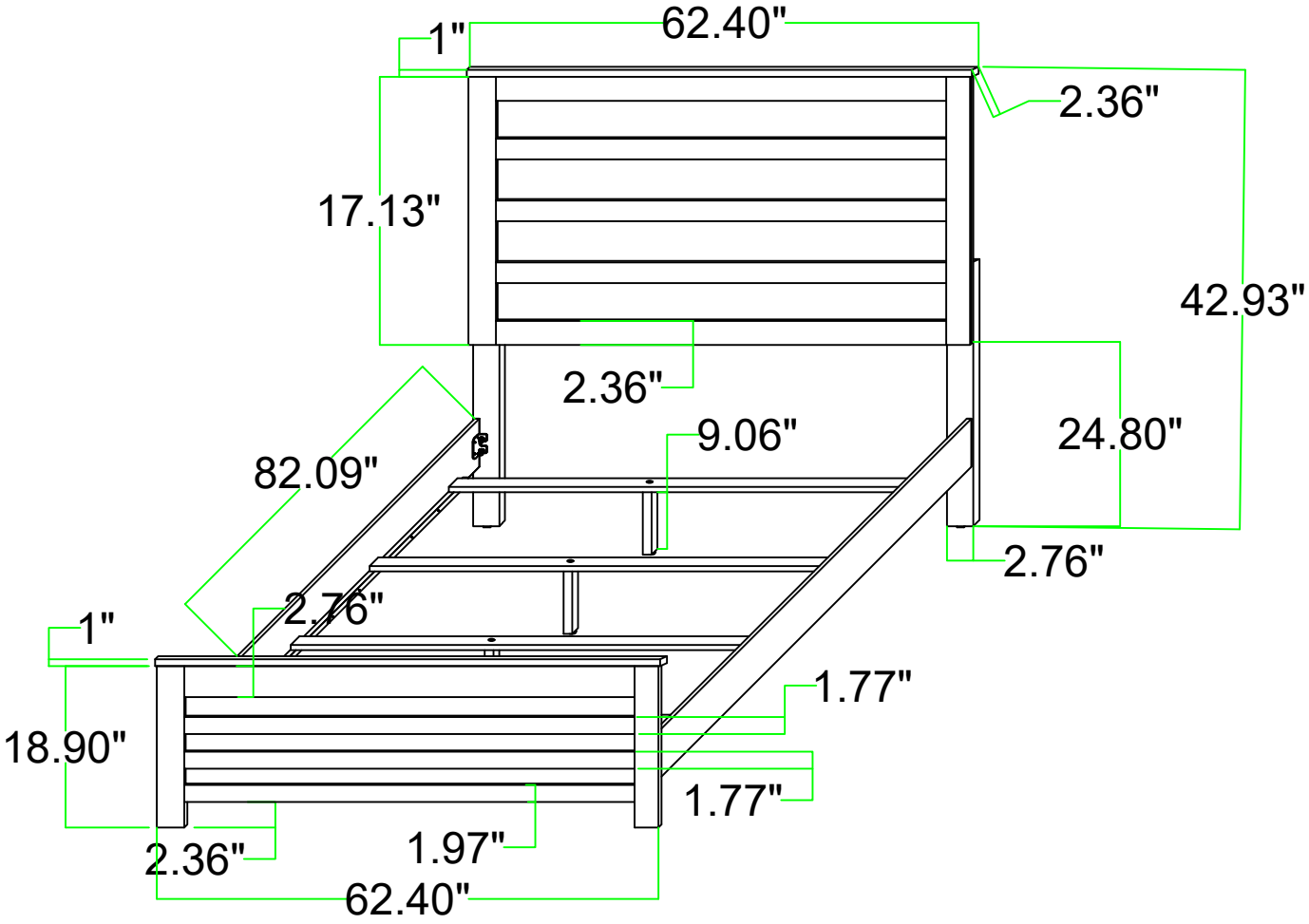
1"
62.40"
2.36"
17.13"
42.93"
2.36"
9.06"
24.80"
82.09"
2.76"
2.76"
1"
1.77"
18.90"
1.77"
2.36"
1.97"
62.40"

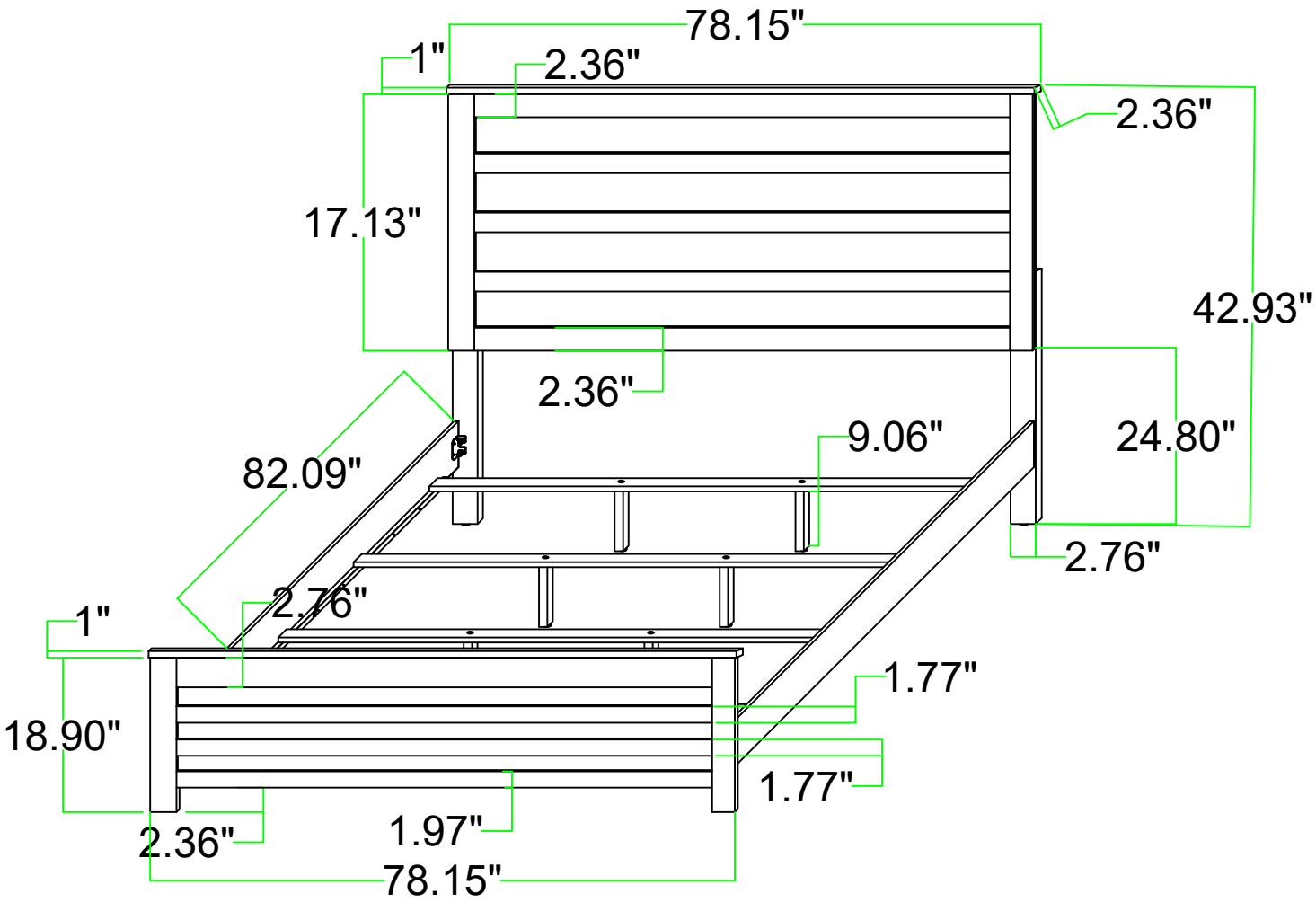
78.15"
1"
2.36"
2.36"
17.13"
42.93"
2.36"
9.06"
24.80"
82.09"
2.76"
2.76"
1"
1.77"
18.90"
1.77"
2.36"
1.97"
78.15"